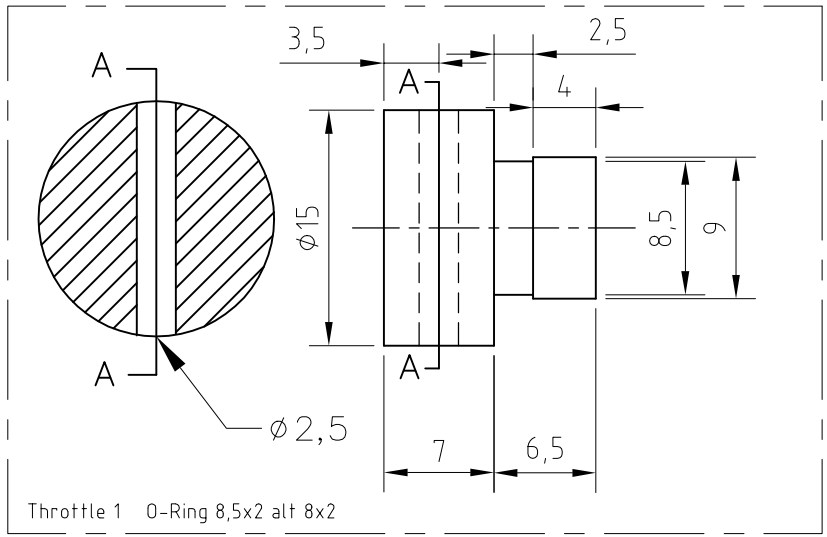

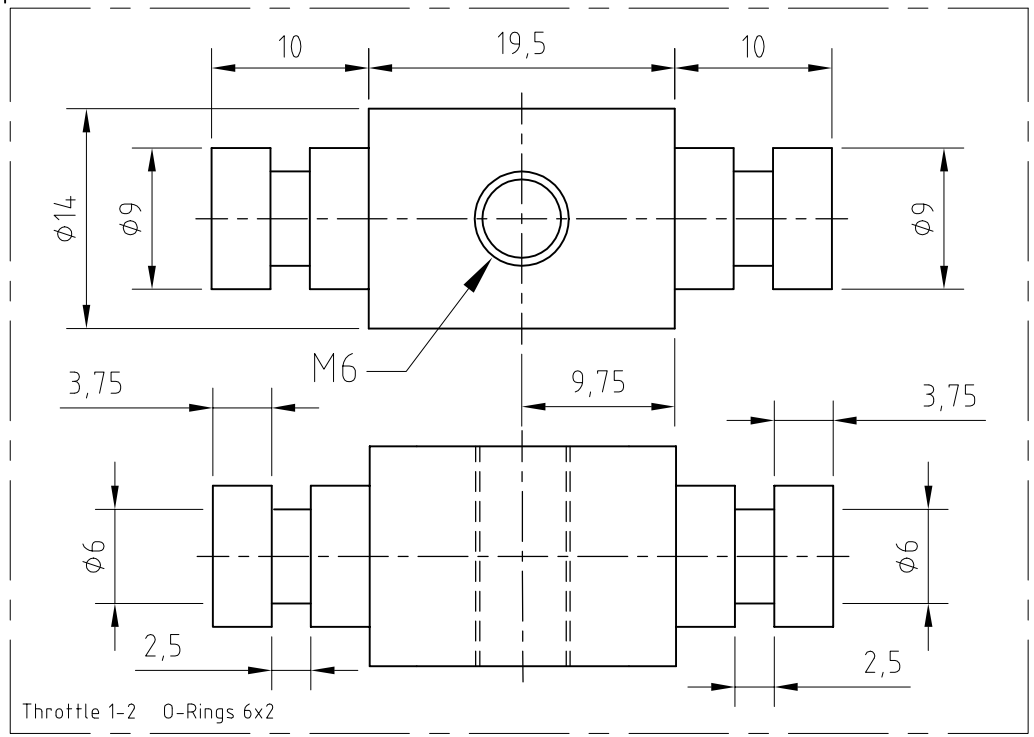

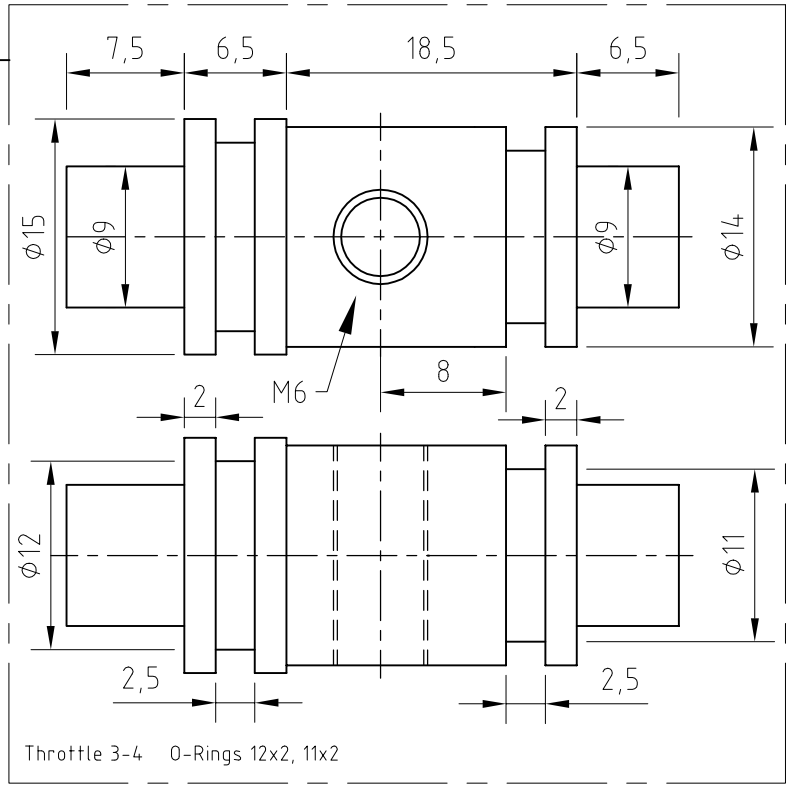

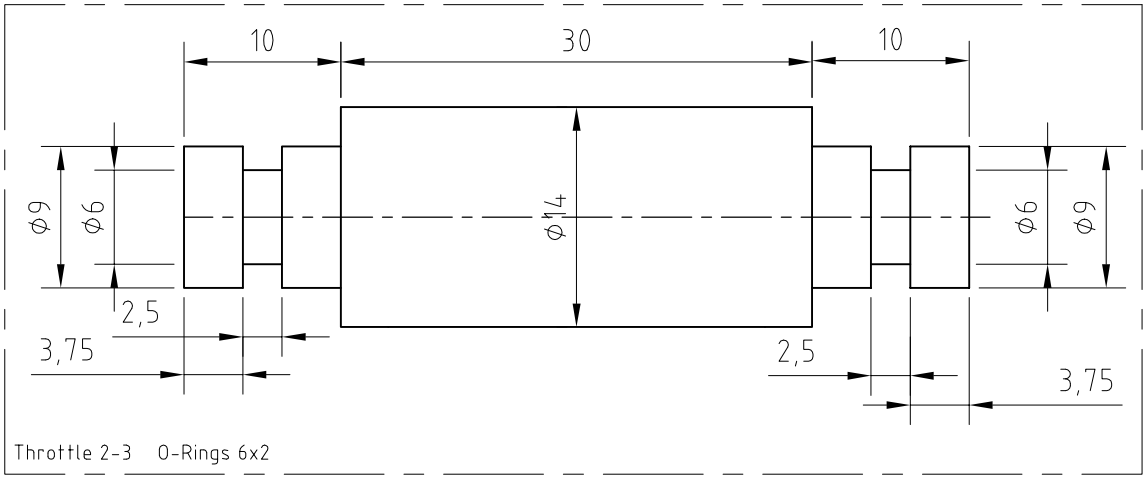

+0.0
−0.1

By:	Item:
MS	Secondary axel plugs
mm	Material: Aluminium