THIS DRAWING IS UNPUBLISHED. RELEASED FOR PUBLICATION .19
© COPYRIGHT 19 BY AMP INCORPORATED. ALL RIGHTS RESERVED.

DOC	DIST
GE	00

REVISIONS

#	LTR	DESCRIPTION	DATE	DWN	APVD
	0	REL PER PR# 97-15	7-21-97	PC	DS
	A	REVISED PER EC# OK40-0028-98	3-30-98	PC	DS
	B	REVISED PER EC# OK40-0156-98	8-31-99	PC	DC
	C	REVISED PER EC# OK40-0036-01	13MAR01	AG	DC

1. ACCEPTS #4 SELF TAPPING SCREW (ELCO HI-LO THREAD CUTTING STYLE OR EQUIVALENT) TO BE DRIVEN AT 0.6±0.2 N-M.
2. HOUSING COLORS ARE MECHANICALLY KEYED TO MATE ONLY WITH IDENTICALLY COLORED PLUG ASSEMBLIES.
3. GASKET TO BE MADE FROM SILICONE (AMP P/N 0-0988206-1, SARA #33341). GASKET WILL BE U.V. CURED IN PLACE.

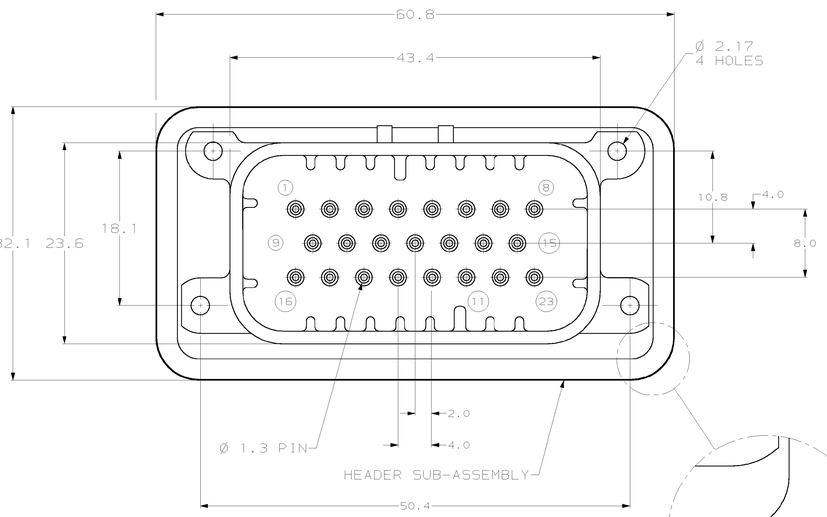

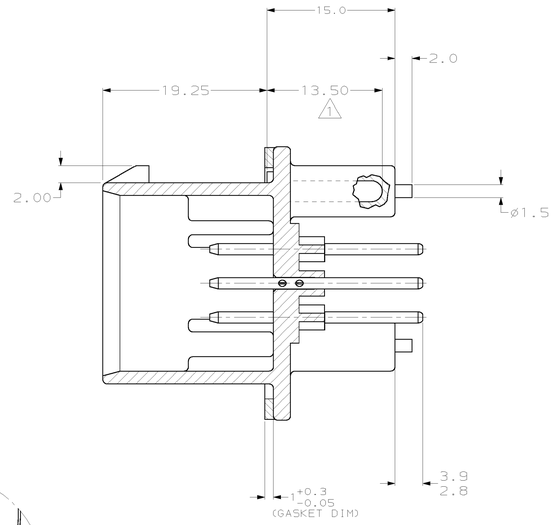

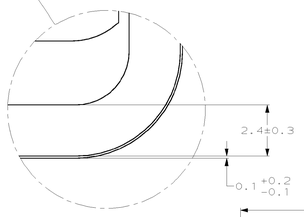

SCALE 10:1

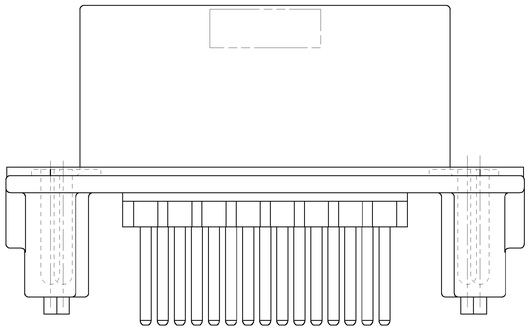

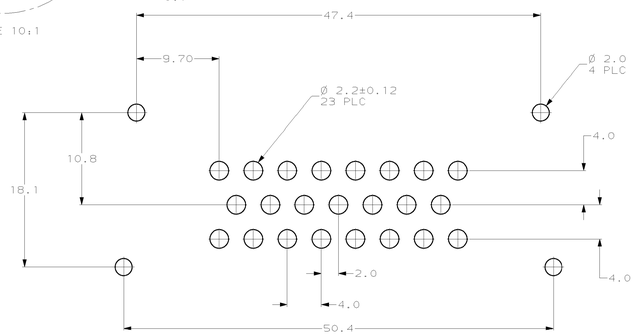

RECOMMENDED P.C. BOARD LAYOUT
FOR 1.57 THICK P.C. BOARD

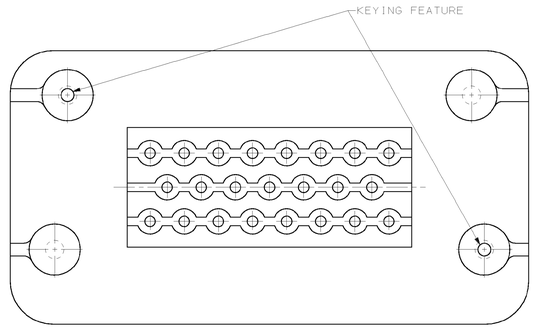

KEYING FOR 776228-1 AND 776228-5

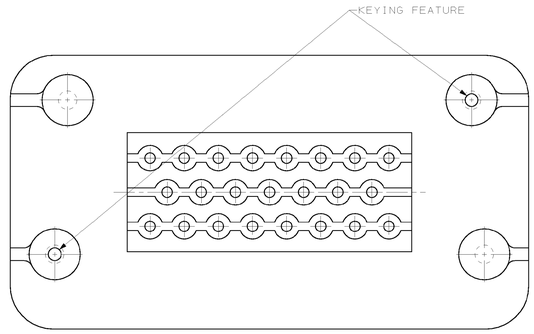

KEYING FOR 776228-2 AND 776228-4

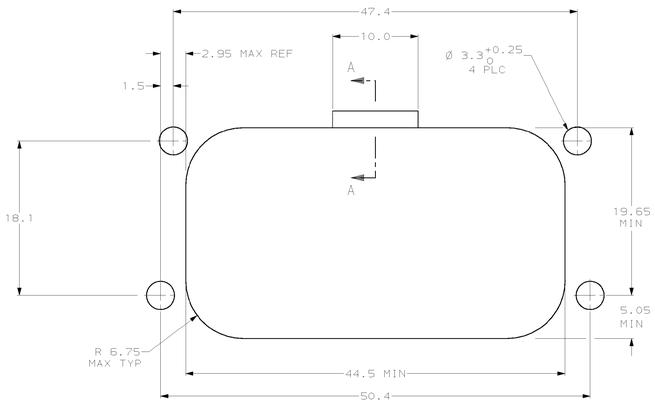

RECOMMENDED MOUNTING HOLE LAYOUT
FOR 5.0 MAX THICK PANEL

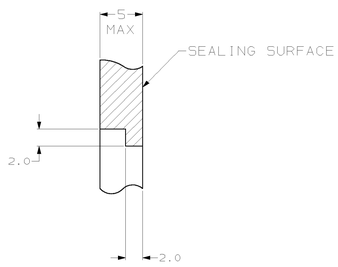

SECTION A–A
OPTIONAL CONSTRUCTION IF
THICKNESS IS GREATER THAN 2.0

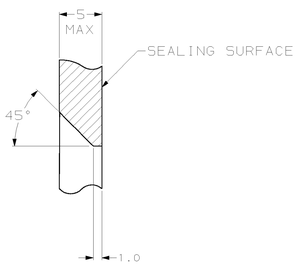

SECTION A–A
OPTIONAL CONSTRUCTION IF
THICKNESS IS GREATER THAN 2.0

3	MAKE FROM 1-776220-5	1-776228-5
3	MAKE FROM 1-776220-4	1-776228-4
3	MAKE FROM 1-776220-2	1-776228-2
3	MAKE FROM 1-776220-1	1-776228-1
3	MAKE FROM 776220-5	776228-5
3	MAKE FROM 776220-4	776228-4
3	MAKE FROM 776220-3	776228-3
3	MAKE FROM 776220-2	776228-2
3	MAKE FROM 776220-1	776228-1
GASKET MATERIAL	DESCRIPTION	PART NUMBER

THIS DRAWING IS A CONVERTED DRAWING AND MAY NOT ADEQUATELY ADDRESS ALL DESIGN REQUIREMENTS. ANY ADDITIONAL DETAIL REQUIRED SHOULD BE OBTAINED FROM THE CURRENT PRODUCTION DRAWING.

DIMENSIONS: MM
UNLESS OTHERWISE SPECIFIED
0 PLC ±.4
1 PLC ±.2
2 PLC ±.13
3 PLC ±.1
4 PLC ±.05
ANGLES ±.5°
MATERIAL: SEE TABLE
FINISH: SEE TABLE

DWN P. COLLINS 7-21-97
CHK D. STILLIE 7-21-97
APVD D. GROVE 7-21-97
WEIGHT SHEET SIZE
108-1329
APPLICATION SPEC
114-16016
WEIGHT –
CUSTOMER DRAWING

AMP Incorporated
Harrisburg, PA 17105-3608

NAME
HEADER ASSEMBLY,23 POSITION, VERTICAL,AMPSEAL™

SIZE	CAGE CODE	DRAWING NO
A0	00779	C-776228

SCALE 4:1 SHEET 1 OF 1 REV C

AMP 4806 REV 10/93

13-MAR-01 15:46:43 amp37325 /home/amp37325/edmmod

Lead Free Conversion in Process - Refer to Specification 230-700 at www.tycoelectronics.com/leadfree